Sonth (HK) Industrial Co.,Ltd

SG30PM dc stepper gear motor

Description

1.Size: 30*17.5mm

2.Voltage: 12V (5~12V)

3.Step angle: 7.5°

4.Reduction ratio: 1/85

5.Specs can be custmized for you

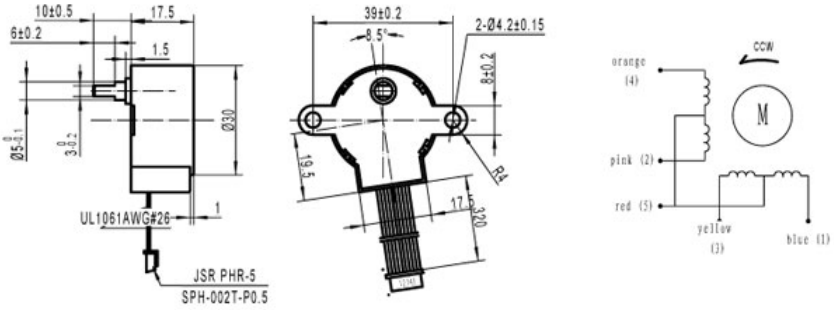

Reduction Ratio	Voltage V	Step Angle degree	Step Angle Phase	Resistance Ω	Torque Pull-in/g.cm	Torque Pull-out/g.cm
1/85	12	7.5°/85	4	130	400	900

TEL:+86-755-89480927
FAX:+86-755-88366423
Web：www.sonth123.com
Msn：sonth123@hotmail.com