Sonth (HK) Industrial Co.,Ltd

S06PM: dc stepper motor

Description

1.Size: 6*6.4 mm

2.Voltage: 4.5V

3.Step angle: 18°

4.Phase: 2-2

5.Specs can be custmized for you

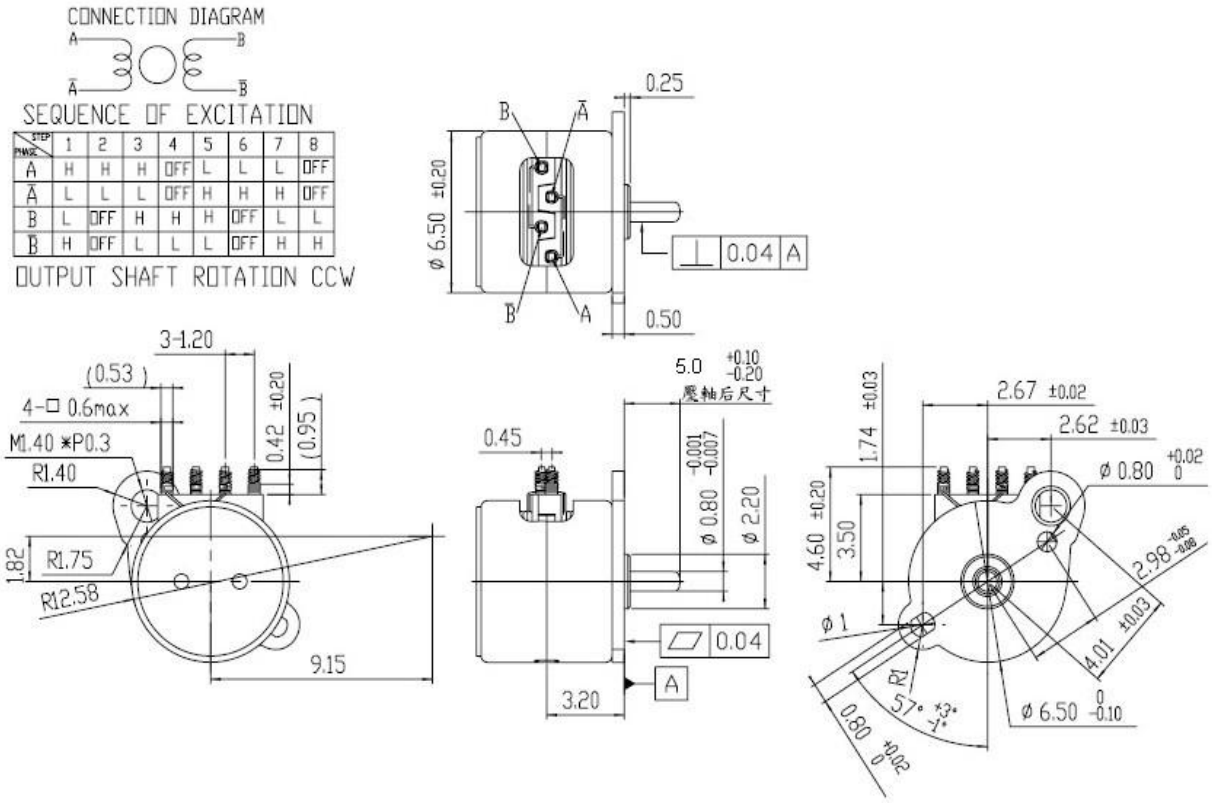

Voltage	Step Angle		Max Frequency			Torque	
V	degree	Phase	Starting/pps	Response/pps	Resistance/Ω	Pull-in/g.cm	Pull-out /g.cm
4.5	18°	2-2	1100	2000	50	0.6 (19200pps)	1.2 (600pps)

TEL:+86-755-89480927
FAX:+86-755-88366423
Web：www.sonth123.com
Msn：sonth123@hotmail.com